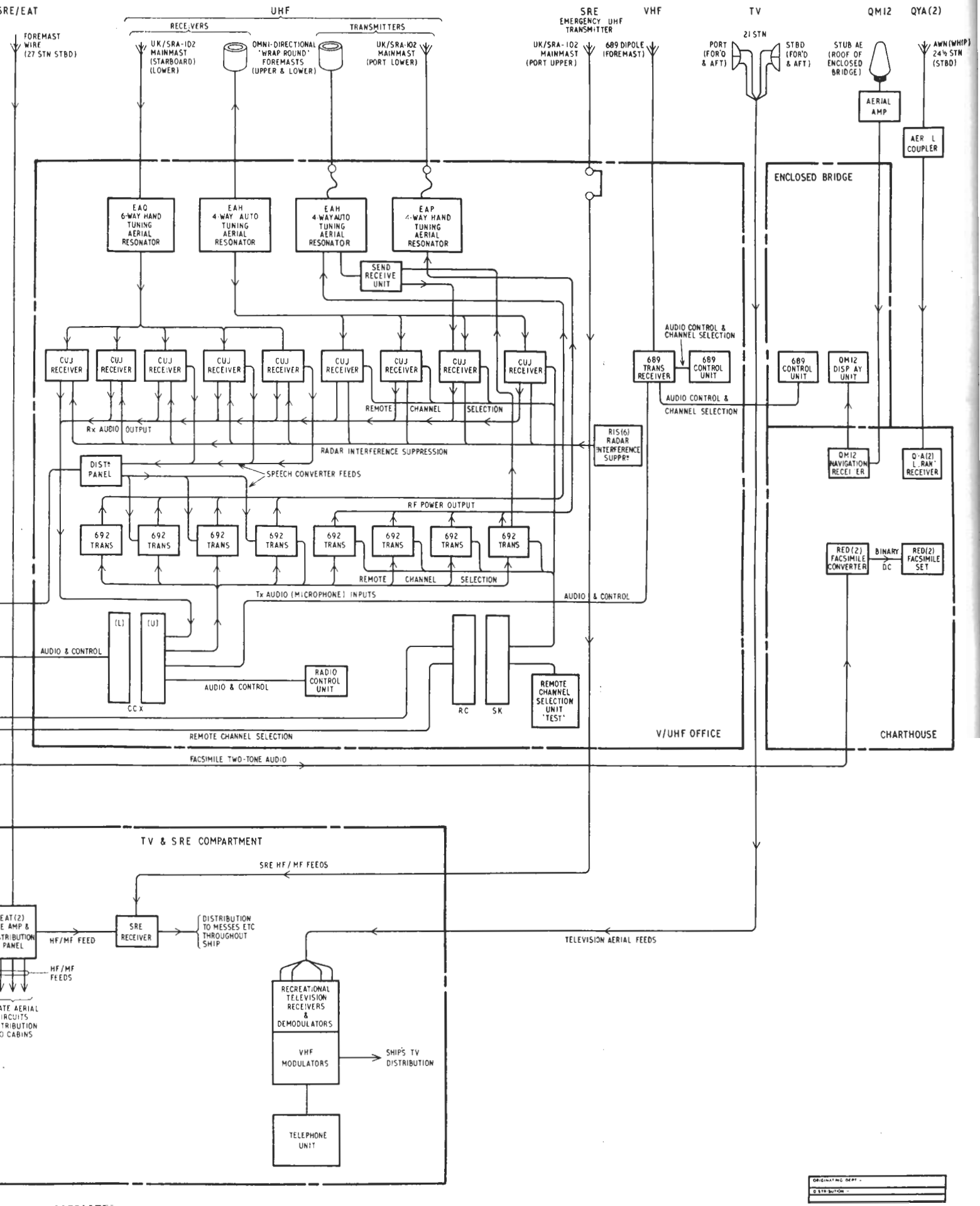
SRE/EAT
UHF
RECEIVERS
TRANSMITTERS
SRE
EMERGENCY UHF TRANSMITTER
VHF
TV
QM12
QYA(2)
FOREMAST WIRE (27 STN STBD)
UK/SRA-102 MAINMAST (STARBOARD) (LOWER)
OMNI-DIRECTIONAL 'WRAP ROUND' FOREMASTS (UPPER & LOWER)
UK/SRA-102 MAINMAST (PORT LOWER)
UK/SRA-102 MAINMAST (PORT UPPER)
689 DIPOLE (FOREMAST)
21 STN
PORT (FOR'D & AFT)
STBD (FOR'D & AFT)
STUB AE (ROOF OF ENCLOSED BRIDGE)
AWN (WHIP) 24½ STN (STBD)
AERIAL AMP
AER L COUPLER
ENCLOSED BRIDGE
EAQ 6-WAY HAND TUNING AERIAL RESONATOR
EAH 4-WAY AUTO TUNING AERIAL RESONATOR
EAH 4-WAY AUTO TUNING AERIAL RESONATOR
EAP 4-WAY HAND TUNING AERIAL RESONATOR
SEND RECEIVE UNIT
AUDIO CONTROL & CHANNEL SELECTION
CUJ RECEIVER
689 TRANS RECEIVER
689 CONTROL UNIT
689 CONTROL UNIT
QM12 DISPLAY UNIT
AUDIO CONTROL & CHANNEL SELECTION
REMOTE CHANNEL SELECTION
Rx AUDIO OUTPUT
RIS(6) RADAR INTERFERENCE SUPPR
RADAR INTERFERENCE SUPPRESSION
DIST PANEL
SPEECH CONVERTER FEEDS
QM12 NAVIGATION RECEIVER
Q-A(2) L RAN RECEIVER
RF POWER OUTPUT
692 TRANS
RED(2) FACSIMILE CONVERTER
BINARY DC
RED(2) FACSIMILE SET
REMOTE CHANNEL SELECTION
Tx AUDIO (MICROPHONE) INPUTS
AUDIO & CONTROL
(L)
(U)
AUDIO & CONTROL
RADIO CONTROL UNIT
AUDIO & CONTROL
CCX
RC
SK
REMOTE CHANNEL SELECTION UNIT 'TEST'
REMOTE CHANNEL SELECTION
V/UHF OFFICE
CHARTHOUSE
FACSIMILE TWO-TONE AUDIO
TV & SRE COMPARTMENT
SRE HF/MF FEEDS
EAT(2) E AMP & STRIBUTION PANEL
HF/MF FEED
SRE RECEIVER
DISTRIBUTION TO MESSES ETC THROUGHOUT SHIP
TELEVISION AERIAL FEEDS
HF/MF FEEDS
ATE AERIAL IRCUITS TRIBUTION O CABINS
RECREATIONAL TELEVISION RECEIVERS & DEMODULATORS
VHF MODULATORS
SHIP'S TV DISTRIBUTION
TELEPHONE UNIT

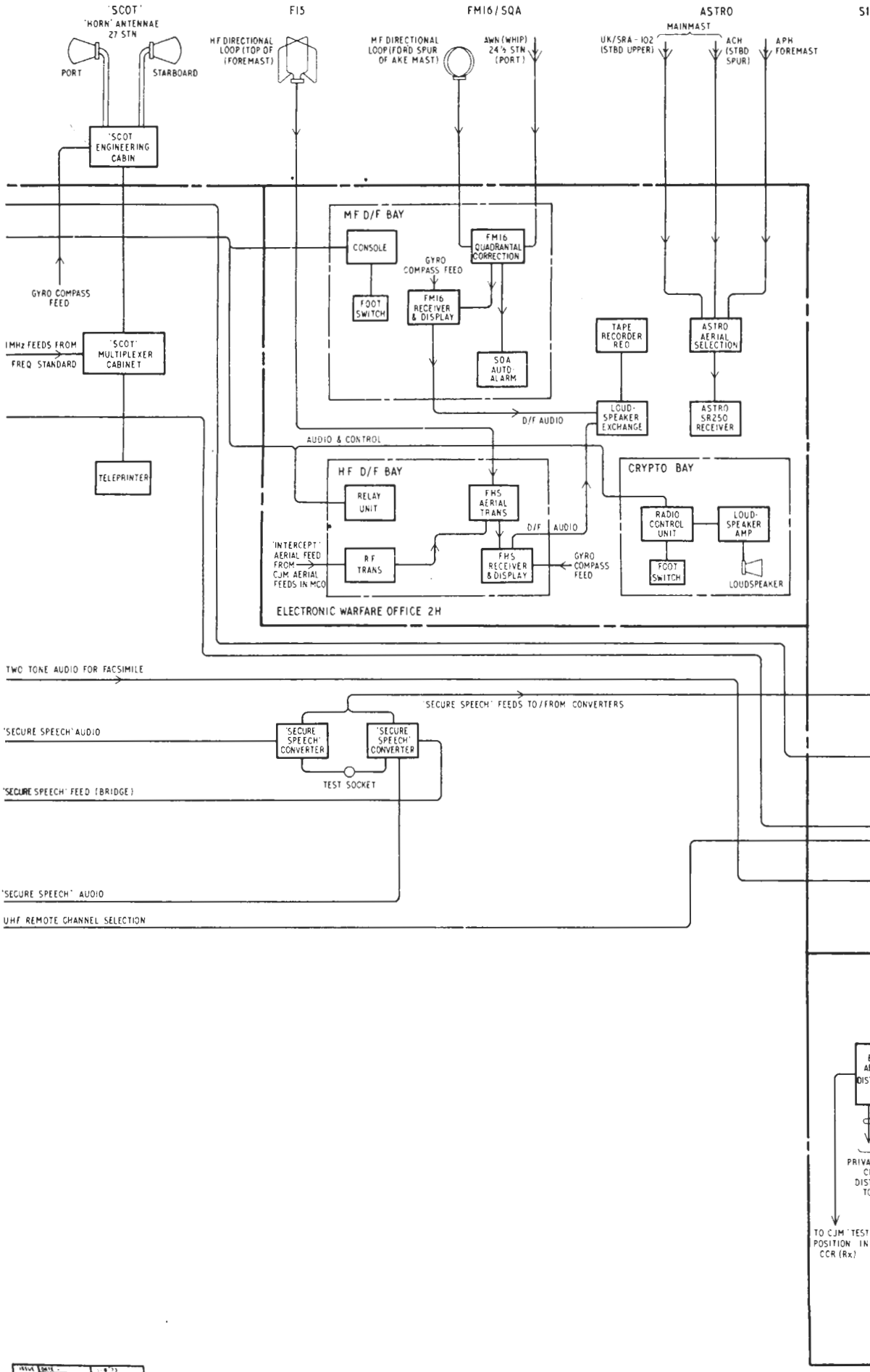
'SCOT'
'HORN' ANTENNAE 27 STN
PORT
STARBOARD
F15
HF DIRECTIONAL LOOP (TOP OF (FOREMAST)
FM16/SQA
MF DIRECTIONAL LOOP (FORD SPUR OF AKE MAST)
AWN (WHIP) 24½ STN (PORT)
ASTRO
MAINMAST
UK/SRA-102 (STBD UPPER)
ACH (STBD SPUR)
APH FOREMAST
'SCOT' ENGINEERING CABIN
GYRO COMPASS FEED
1MHz FEEDS FROM FREQ STANDARD
'SCOT' MULTIPLEXER CABINET
TELEPRINTER
MF D/F BAY
CONSOLE
FOOT SWITCH
FM16 QUADRANTAL CORRECTION
GYRO COMPASS FEED
FM16 RECEIVER & DISPLAY
SOA AUTO ALARM
TAPE RECORDER REC
ASTRO AERIAL SELECTION
LOUD-SPEAKER EXCHANGE
ASTRO SR250 RECEIVER
D/F AUDIO
AUDIO & CONTROL
HF D/F BAY
RELAY UNIT
FHS AERIAL TRANS
D/F AUDIO
'INTERCEPT' AERIAL FEED FROM CJM AERIAL FEEDS IN MCO
RF TRANS
FHS RECEIVER & DISPLAY
GYRO COMPASS FEED
CRYPTO BAY
RADIO CONTROL UNIT
LOUD-SPEAKER AMP
FOOT SWITCH
LOUDSPEAKER
ELECTRONIC WARFARE OFFICE 2H
TWO TONE AUDIO FOR FACSIMILE
SECURE SPEECH' FEEDS TO/FROM CONVERTERS
'SECURE SPEECH' AUDIO
'SECURE SPEECH' CONVERTER
'SECURE SPEECH' CONVERTER
TEST SOCKET
'SECURE SPEECH' FEED (BRIDGE)
'SECURE SPEECH' AUDIO
UHF REMOTE CHANNEL SELECTION
TO CJM 'TEST' POSITION IN CCR (Rx)